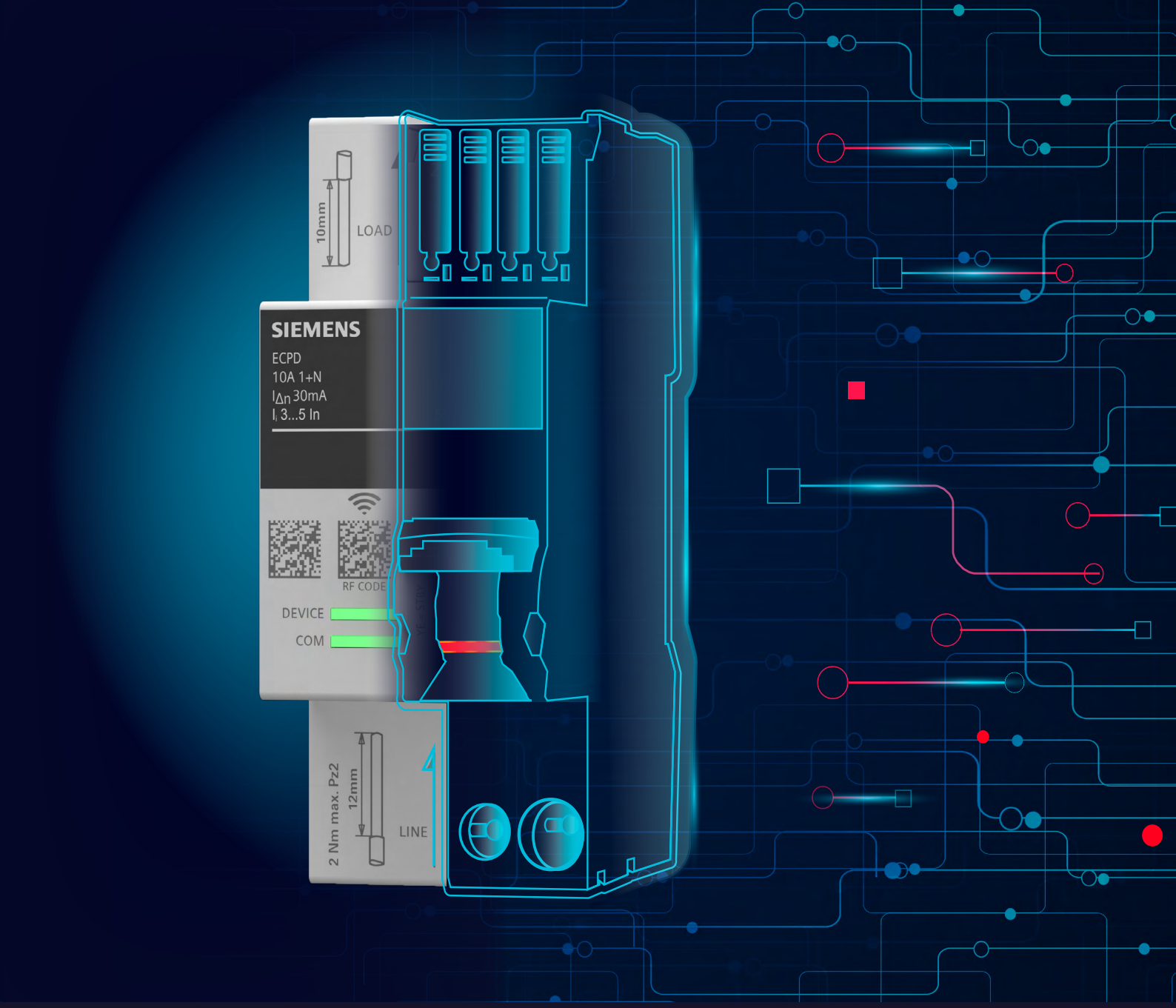

TOTALLY INTEGRATED POWER

Technical Series 21

Semiconductor Protective Device ECPD - The Future in Low-Voltage Systems

SIEMENS

Semiconductor Protective Devices – The Future in Low-Voltage Systems

Siemens is ushering in a new era in the low-voltage world, in which safety, efficiency and diversity for personal safety and system protection are redefined in a revolutionary way.

The **E**lectronic **C**ircuit **P**rotection **D**evice (short: ECPD) combines the proven reliability of classic electro-mechanical-switching technology with the speed and precision of state-of-the-art power electronics, while offering a wide range of intelligent additional functions for networking and integration.

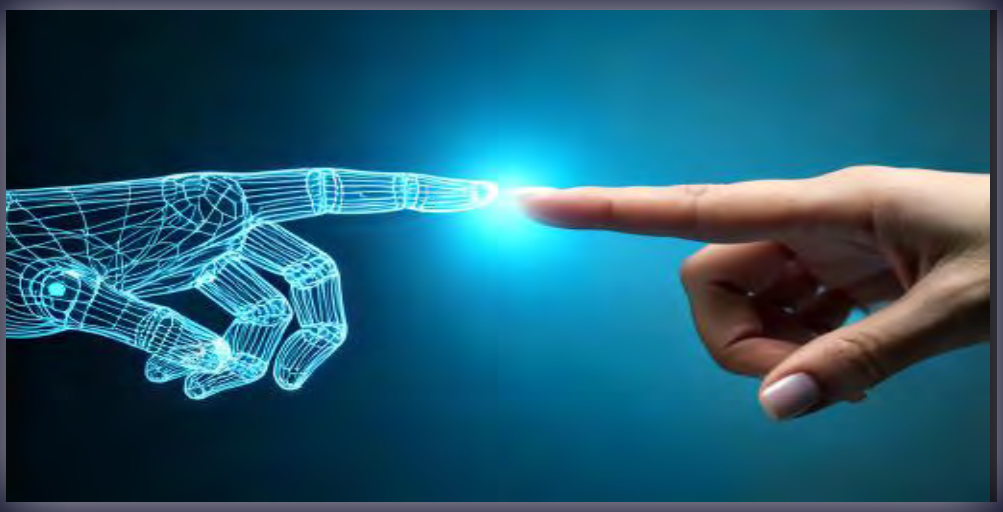

In this technical document, we present a new type of protection technology with numerous application and usage options to make your power supply systems sustainable and future-proof.

Contents

1

New Challenges for Electrical Power Distribution Systems 5

2

The Way to a new Future 6

3

The ECPD (Electronic Circuit Protection Device) 5TY1 7

Device Architecture 9

Switching States 10

Breaking Capacity, Current and Energy-Limitation 11

Selectivity Behaviour 13

Backup Protection Capability 14

Handling of Inrush and Starting Currents 14

Communication Function 16

Cybersecurity 17

Sustainability 18

Normative Situation – Applicability of the ECPD in Electrical Planning 19

4

Application Samples for the ECPD 20

Application Sample 1 – Protection in the Event of Neutral Conductor Break 20

Application Sample 2 – Selectivity in Distribution Boards with high Prospective Currents 20

Application Sample 3 – Monitoring Leakage/Load Currents for critical Loads 22

Application Sample 4 – Lighting Circuits for Workstations, Parking garages, large Halls or Tunnels 23

Application Sample 5 – UPS-buffered Loads 24

Application Sample 6 – Use in Control Cabinets 25

Application sample 7 – „Service Sockets" in public Areas 26

5

The Consequences 27

6

The Outlook 27

7

Totally Integrated Power – Individual Expert advice and Project support 28

1 New Challenges for Electrical Power Distribution Systems

The demands placed on electrical power distribution by customers and production processes have always been in a state of flux, but never before have they been as great as in recent years. Whereas in the past the focus was primarily on planning aspects such as personal safety and system protection, low space requirements and high availability, today new criteria such as

- Energy efficiency and transparency
- Digitalization
- Automation
- Sustainability

are added on top.

Energy supply systems are usually planned and operated for several decades. Adjustments due to application-related changes or expansions to consumer and user structures (e.g. servers with higher power requirements in data centers) are therefore not unusual.

The simultaneous process of rethinking the use of energy towards greater transparency and efficiency is reinforcing this endeavor, with the result that installed systems reach their limits more quickly and are only able to meet the new requirements to a limited extent after just a few years.

While medium-voltage systems can offer generous expansion reserves, the situation is different for low-voltage systems.

In the upper and middle distribution levels of a low-voltage supply network typically air circuit-breakers (ACB) and molded-case circuit-breakers (MCCB) are in use. Their rated currents range goes up to 6,300 A for ACBs and up to 1,600 A for MCCBs. At nominal voltage 400 V, short-circuit strength of up to 150 kA can be achieved. This technology is largely mature in terms of its physical load limits.



Increasing digitalization is currently forcing developments towards communication capability, integration of measurement functionality and update capability, e.g. for the electronic tripping units (ETU) of these circuit-breakers, thus setting the course for the future viability of the electrical network in the medium to long term. The proven fuse-linked technology, now equipped with communication-capable NH fuses, is also facing up to this new challenge.

Forward-looking network planning and the consideration of appropriate power and space reserves are now more important than ever when planning these distribution levels.

In the sub-distribution board levels or where the consumers are connected, forward-looking planning is more difficult. Here, mainly DIN rail mounted devices such as miniature circuit-breakers (MCB), residual current circuit-breakers (RCD), arc fault detection device (AFDD) or device combinations LS/ FI (RCBO) are used. As long as the building architect has no objections, sufficient space and power reserves can also be planned in the lowest distribution levels, but taking them into account usually quickly leads to a higher demand for the required short-circuit power; the cable and line cross-sections to be laid and possibly also the transformer feed must be designed accordingly from the outset, i.e. oversized.

The required short-circuit strength of the protective switching devices in electrical power distribution systems for infrastructure and industrial buildings is a decisive factor that has often led to compromises having to be made in terms of system availability.

In this case, group fuses are usually used to ensure combined short-circuit protection (also known as backup protection) to downstream MCB, RCD and RCBO devices.

This solution comes at the cost of restrictions in the area of selective device behavior and thus limited system availability in the event of a (combined) short-circuit trip.

Functional extensions for DIN rail mounted devices, such as measuring function, undervoltage release, remote release, auxiliary switch, etc., are usually at the expense of space requirements and lead to a duplication of the required modular width. In the usual 2- to 4-row DIN distribution cabinets, the number of available free spaces is therefore usually quickly exhausted. If space permits, this results in the installation of additional distribution cabinets or panel designs.

2 The Way to a new Future

The basis for optimizing network operation, network utilization as well as cost, energy and resource efficiency is the knowledge of data and parameters for all circuits and distribution levels of an electrical power distribution system.

At the same time, there is a requirement for system availability, safety and network quality to maintain or even improve their current standards.

The provision of this data, the creation of transparency in energy consumption behavior, the possibility of setting up energy automation solutions and the ability to carry out updates or functional enhancements to installed protection devices in operation at any time reflect the future of low-voltage power distribution.

The breakthrough in power electronics and the rapid evelopment in information technology open up new perspectives and intelligent, alternative solutions, away from the classic, electro-mechanical protective switching devices towards electronic, parameterizable multifunctional protective switching devices.



3 The ECPD (Electronic Circuit Protection Device) 5TY1

The ECPD is a multifunctional and parameterizable protective/switching device based on a combination of classic electro-mechanical isolating contacts with an ultra-fast electronic switch (power electronics). Its primary function is to ensure line protection and personal safety coupled with an enormous number of additional functions for protecting, switching, measuring and monitoring.

In a single DIN rail mounted device the required protective measures for the installation of low-voltage systems are fulfilled:

- against electric shock (IEC 60364-4-41 resp. VDE 0100-410)
- for overcurrent (IEC 60364-4-43 or VDE 0100-430)
- for overvoltages (IEC 60364-4-44, section 442 or VDE 0100-442)
- for undervoltage (IEC 60364-4-44, section 445 or VDE 0100-450)
- disconnecting and switching (HD 60346-4-46 or VDE 0100-460)



Fig. 3/1: Siemens ECPD 5TY1

The technical features of the ECPD in detail:

Programmable rated current

The reduction in the number of variants of nominal current types simplifies stock/spare parts management for control cabinet/switchgear manufacturers and those responsible for operating electrical distribution networks. This expands the previous options for pre-assembling sample distribution boards for implementation in projects.

Improved tolerances of the overload protection (I_{th}; OCPD)

The narrower tolerances of the non-tripping current (I_1 or I_{nt}) and the tripping current (I_2 or I_t), which are closer to the rated current, improve the overload protection of the cable to be protected compared to conventional circuit-breakers. This means that the functionality of cables and lines is guaranteed over several years of operation with sustained overload currents in the range of I_2 , as the ageing of the insulation due to overtemperature is reduced (Tab 1/1).

	MCB IEC 60898-1 (VDE 0641-11) **RCBO** IEC 61009-1/2-1 (VDE 0664-20/21)	**ECPD**
Non-tripping current I_1 resp. I_{nt}	1,13 x I_n	1,05 x I_n
Tripping current I_2 resp. I_t	1,45 x I_n	1,13 x I_n

Tab. 1/1: Comparison of test currents for overload release MCB / RCBO and ECPD

Characteristic-independant short-circuit tripping (I>, OCPD)

The evaluation algorithms and functional principles of the integrated power electronics make previous load-specific (tripping) characteristics, e.g. due to inrush currents, obsolete (Tab 1/2).

Capacitive inrush currents, e.g. from LED power supply units, can be distinguished from real short circuits by the evaluation algorithms. Inside the device, the power electronics ensure short-circuit protection with the required (load) sensitivity, thereby optimizing system safety without the risk of false tripping.

Due to the use of power electronics, the short-circuit switch-off time of the ECPD is up to 1000 times faster than the switch-off time of electro-mechanical protective/ switching devices (Tab 1/2).

The possibilities and advantages opened up by this ultra-fast disconnection, including in conjunction with other upstream and downstream switching/protective devices, are explained in detail below.

Integrated residual current release (ΔI, RCD) and residual current monitoring (RCM)

The integrated short-time delayed residual current release of type F with IΔn 30 mA ensures personal safety at all times. Its three sensitivity settings *sensitive* (18 mA), *standard* (22 mA) and *robust* (27 mA) allow adaptation to the respective application conditions within the current standard limits.

In addition, the ECPD offers RCM functionality that enables insulation damage to be detected in good time and measures to be taken before a fault shutdown occurs.

Programmable undervoltage release (U<)

The undervoltage release U<, which can be switched on or off, can be set in the range 0.37 (85V) ... 0.7 * U_0 . In this way, consumers for which a voltage recovery could pose a danger to systems and persons can be switched off preventively. When the operating voltage returns, an automatic restart can also take place depending on the setting.

Permanent overvoltage function (U>)

Operational overvoltages that could cause damage to loads or switching devices can be switched off as a precaution using the permanent overvoltage function. When the operating voltage returns, an automatic switch-on can be defined.

Disconnection function

For maintenance purposes, a mechanical disconnecting contact ensures safe disconnection. Accidental reconnection can be prevented with the aid of a mechanical lock. This is essential for compliance with the 5 safety regulations, among other things.

Auxiliary and fault signal switches (HS + AS)

In addition to the protective functions described, the ECPD also includes the functionality of an auxiliary and fault signal switch (HS + AS) is integrated. This permanently records the switching status of the protective device and is available for reporting to a higher-level (building) management system.

The digital output enables the electrical transmission of information such as switching status, fault triggering etc. to a central control unit, for example.

The digital input enables external statuses to be queried for further internal processing, e.g. as a switching command.

	MCB IEC 60898-1 (VDE 0641-11) **RCBO** IEC 61009-1/2-1 (VDE 0664-20/21)	**ECPD**
Non-tripping current I_4 resp. I_{nt}	B-characteristic: 3 x I_n C-characteristic: 5 x I_n D-characteristic: 10 x I_n	3 x I_n
Tripping current I_5 resp. I_t	B-characteristic: 5 x I_n C-characteristic: 10 x I_n D-characteristic: 20 x I_n	3,6 x I_n

Tab. 1/2: Comparison of test currents for short-circuit release MCB / RCBO and ECPD

Thanks to the integrated measuring sensors, numerous measuring functions are available, the measuring accuracy is adapted to IEC 61557-12 or VDE 0413-12:

- Current (± 0.5 %)
- Voltage (± 0.5 %)
- Mains frequency (± 0.5 %)
- Active power (± 1.0 %)
- Reactive power (± 1.0 %)
- Apparent power (± 1.0 %)
- Power factor (± 1.0 %)
- Temperature (inside device)

An alarm when currents, voltages and temperatures exceed or fall below threshold values helps the operating staff to take action in good time before a fault can occur. Counters for operating hours, operational switching operations, overload and short-circuit shutdowns serve as indicators for predictive maintenance. Additional auxiliary functions can be programmed using a digital input (1x DI) and a digital output (1x DO).

LED status indicators simplify the operation of this multi-functional device on site. A test button for device tests, such as RCD test, self-test, etc., further increases the safety of the device. This button is also used to acknowledge tripped messages or to reset the communication interface.

3.1 Device Architecture

Fig. 3/3 illustrates the architecture of the device in a simplified manner.

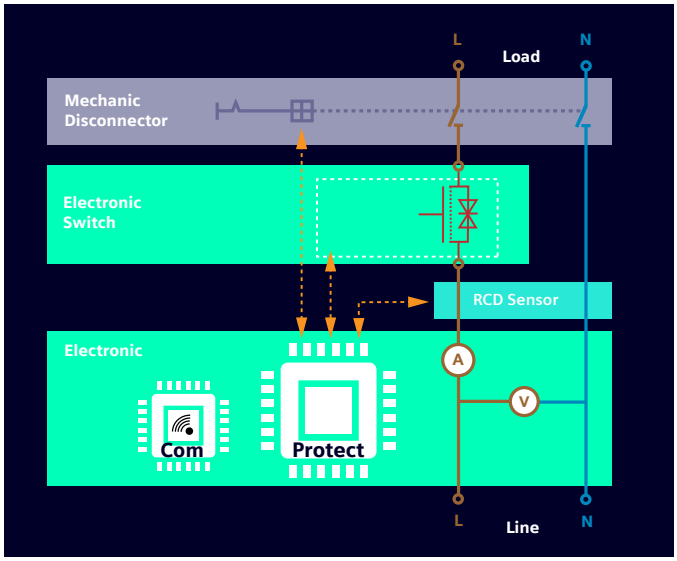

Fig. 3/3: Siemens ECPD 5TY1 – Device architecture

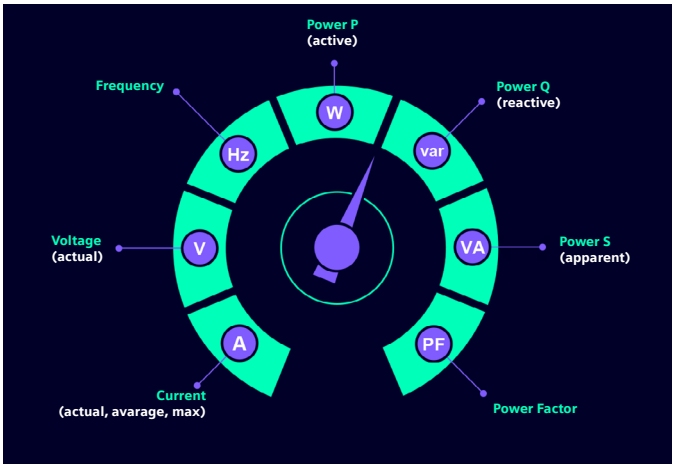

Fig. 3/2: Overview of the measuring functions of the Siemens ECPD 5TY1

Mechanical Disconnector – Safety

The mechanical disconnector ensures safe disconnection of all poles between the load and supply side, as required by standards, e.g. for maintenance purposes. This disconnector can only be reconnected manually. Accidental reconnection can be optimally prevented by means of a padlock.

The switching process always takes place in a de-energized state, i.e.

- Before the contacts open, the current flow is interrupted by the electronic switch.
- Only when the contacts are closed the current flow is released by the electronic switch.

The principle of de-energized switching means that there is no wear on the switching contacts due to any light arcs that may occur during the switching process. The number of switching operations (max. number of switching cycles) is only determined by the mechanics.

The mechanical disconnection unit is controlled internally in such a way that manual reconnection is not possible in the event of a fault or short circuit.

Electronic switch – the power pack

The electronic switch is located in the phase carrying the operating current and is in series with the mechanical disconnector (Fig. 3/3). It is constructed using state-of-the-art power electronics and enables ultra-fast switching (up to 1000 times faster than an electro-mechanical device). In power electronics, switching off means that the power semiconductor used changes from an electrically conductive state to a high-impedance state so that the current flow is interrupted.

The leakage currents of up to 2 mA across the open contacts permitted for electro-mechanical protective devices with isolating properties (see IEC 60898-1 or VDE 0641-11) are ensured without any problems.

The leakage currents in the high-impedance state are also lower than with electro-mechanical protective devices. The voltage potential at the load connection is below the maximum permissible touch voltage.

In the inactive state or if the power electronics are damaged or faulty, the ECPD automatically switches to the high-impedance, i.e. safe switching state (STANDBY). If this is not sufficient, the device will automatically switch to the disconnected state (switching state OFF) due to its built-in safety concept.

Note: As no electronic switching unit is installed in the neutral conductor, the ECPD must not be used in IT systems unless the power supply is interrupted after the first fault is detected, e.g. by an insulation measuring device.

Controller and evaluation unit – the master

High-quality micro-controllers with their intelligent evaluation unit and corresponding protection algorithm ensure maximum safety. This is where the electrical characteristics are measured and processed. Protection and other functions are ensured digitally by the associated firmware.
This principle has already been used successfully for years in electronic tripping units of air circuit-breakers (ACB) and molded-case circuit-breakers (MCCB) or also in arc fault detection devices (AFDD). This technology opens up the possibility of carrying out updates or subsequent functional extensions (already in use with 3WA circuit-breakers).

3.2 Switching States

The device architecture of the ECPD enables a new, third switching state STANDBY (STBY) in addition to the two known switching states OFF and ON (Fig. 3/4).

Switching State ON

In the ON state, the mechanical switching contacts are closed. The electronic switch is in the switched-on, low-resistance (current-carrying) state, recognizable by the red LED status of the mechanical switch lever. This switching state does not differ from the current ON state.

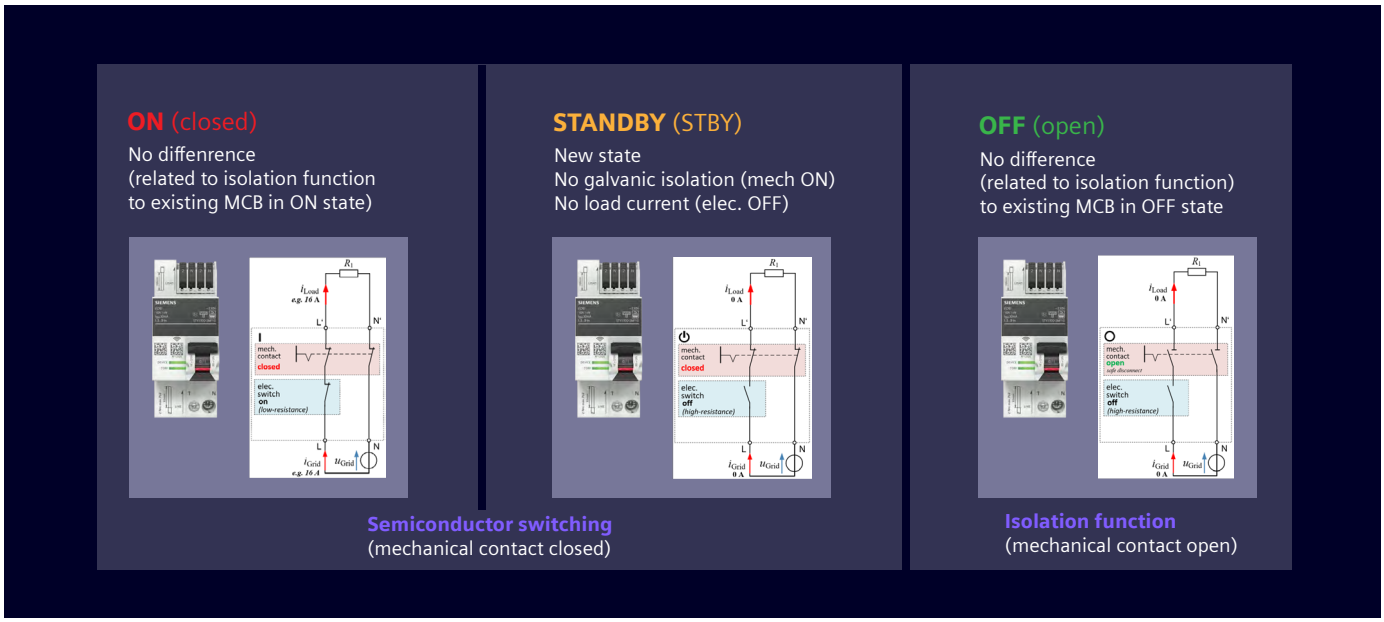

Fig. 3/4: Siemens ECPD 5TY1 – Switching states

Switching State OFF

In the OFF switching state, the mechanical switching contacts are open. The electronic switch is in the high-impedance (current interrupting) state, recognizable by the green - permanently printed - indicator on the mechanical switch lever. Safe disconnection is thus guaranteed. This state does not differ from today's OFF.

Switching State Standby

In the new STANDBY switching state (STBY), the mechanical switching contacts are closed. The electronic switch is in the switched-off, high-impedance (current interrupting) state. This means that no electrical current flows and there is no electrical isolation between the load and supply side.

This new switching state opens up many new application possibilities, such as independent automatic switching or remote restarting without an external motor drive. In normal operation, a type of timer can be implemented or the device detects unusually high energy consumption and can be switched off (remotely) in a targeted manner.

3.3 Breaking Capacity, Current and Energy-Limitation

The breaking capacity of a protective switching device is essentially determined by

- Switch-off time until current flow interruption
- Current limitation by internal arc
- Build-up of a counter voltage
- Current-carrying capacities of the elements in the current path (thermal and mechanical)
- Rate of rise of the short-circuit current (∫di/dt)

Three-phase or alternating current networks are characterized by their inductive behaviour in the event of a short circuit, i.e. the prospective (uninfluenced) short-circuit current starts at 0 A and increases depending on the R/X-ratio of the network and the time or phase position of the voltage up to its first maximum (surge short-circuit current i_p). The duration from the onset of the short-circuit until the surge short-circuit current i_p is reached can vary in low voltage systems in the range between 5 ms and 9 ms.

The course of the prospective short-circuit current in electro-mechanical, current-limiting protective/switching devices is influenced by the opening of the contacts, the (opening) speed, the build-up of the arc and thus the buildup of the countervoltage in the arcing chamber.

Fig. 3/5 (left-hand diagram) shows an example of such a progression from the onset of the short circuit to disconnection.

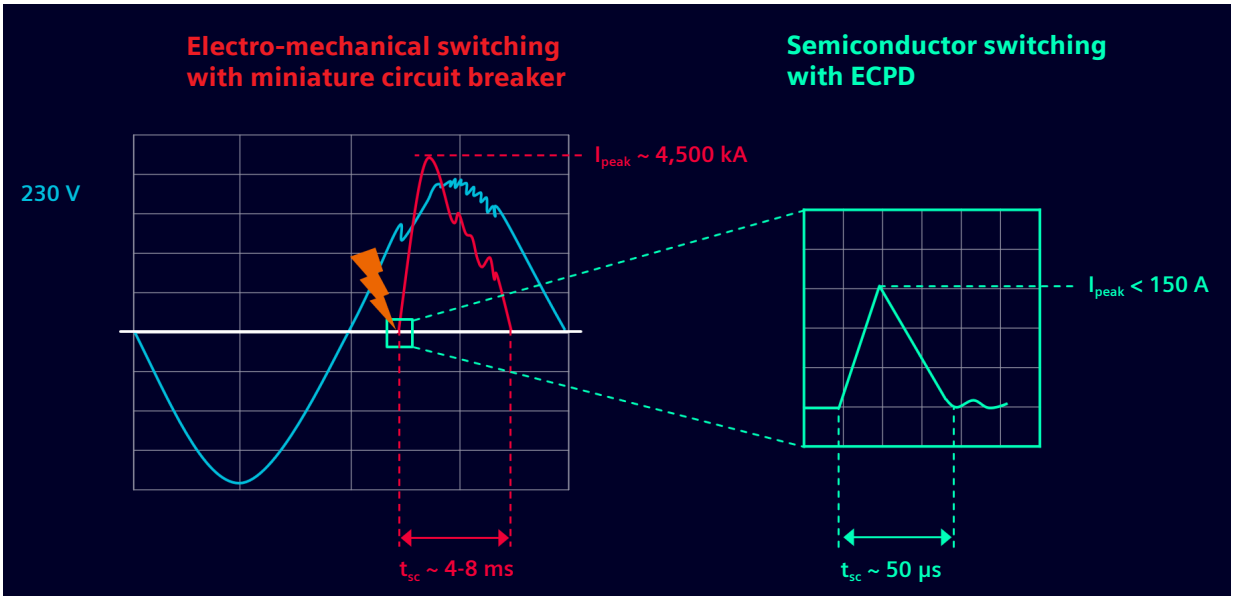

Fig. 3/5: Comparison of an MCB / ECPD short-circuit breaking operation

A prospective short-circuit current of I_k " ≈10 kA with a surge short-circuit current i_p ≈ 14.5 kA is limited by an electro-mechanical circuit-breaker (I_n 16 A) to a let-through current value (instantaneous value) of I_c ≈ 4.5 kA.

The greater the prospective short-circuit current, the greater the let-through current. The switch-off time until the current flow is interrupted is approx. 4 ms to 8 ms.

Fig. 3/5 (right-hand diagram) shows the short-circuit current curve when using an ECPD. Due to the semiconductor technology used, no arc is generated per se, but the ultra-fast disconnection results in efficient short-circuit current limitation during the current rise. The let-trough current is guaranteed to be limited and can reach a maximum of 150 A. The switch-off time is a maximum of 50 µs.

Thanks to its ultra-fast switching capability and the resulting short-circuit current limitation, the ECPD can handle short-circuit currents of up to 75 kA. The electronic switch can switch off these currents as often as required. The rated short-circuit switching capacity of electro-mechanical protective switching devices

I_{cn} in accordance with IEC 60898-1 (VDE 0641-11) resp. IEC 61009-1 (VDE 0664-20) or

I_{cu} in accordance with IEC 60947-2 (VDE 0660-101)

on the other hand, is limited to three or two shutdowns.

In practice, this means for the ECPD:

$I_{cu} = I_{cn} = 75$ kA

In addition to industrial applications, the ECPD may also be used in areas accessible to laypersons (residential installations and similar purposes). In these areas, the standard limits short-circuit currents to 25 kA, which explains why the ECPD has an imprint on the side for rated short-circuit strength of 25 000 A.

Analogous to the current limitation, the let-through energy (I^2t) of an ECPD is correspondingly low and is less than 30 A^2s.

Fig. 3/6 shows the current-energy diagram of the ECPD in comparison with conventional miniature circuit-breakers (MCB) and the destruction limits of PVC cables with different diameters. The heat dissipation during the short circuit in accordance with IEC 60949 was taken into account when showing the destruction limits.

Shown in blue, the let-through energy curve of a miniature circuit-breaker circuit-breaker 5SY4, B16A.

Shown in green, the let-through-energy curve of a ECPD, 16A.

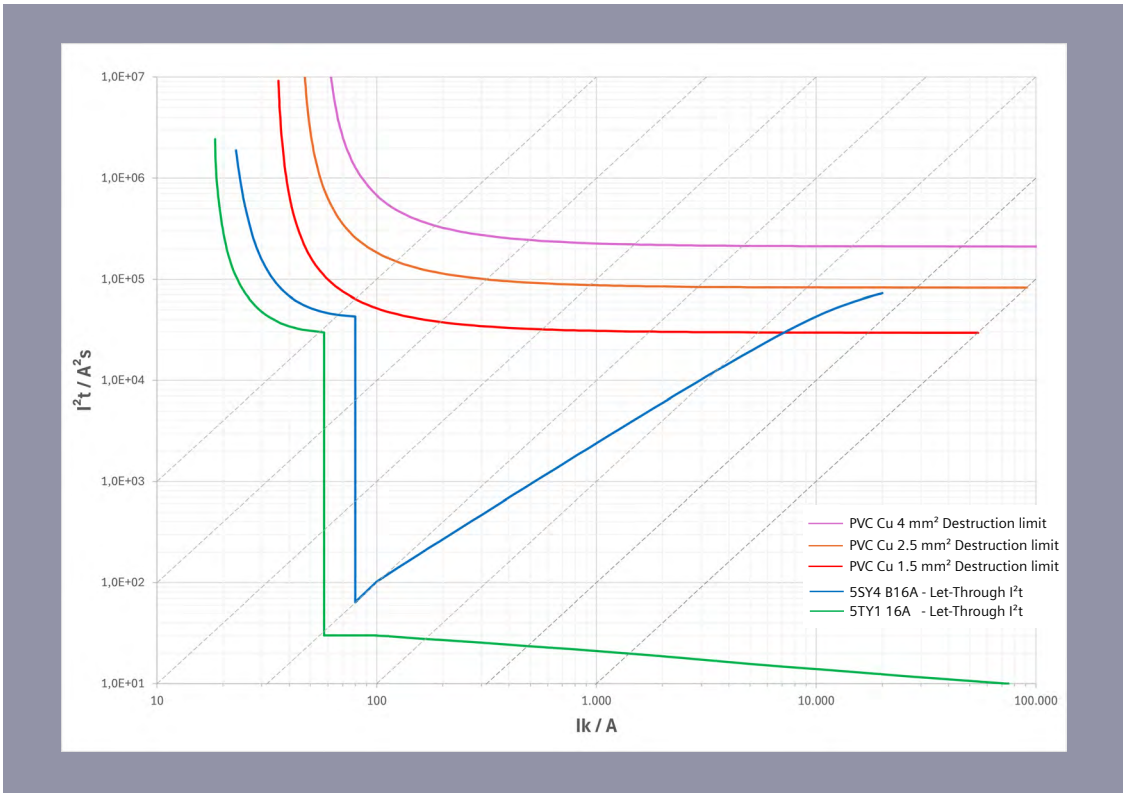

Fig. 3/6: Comparison of current / Energy limitations MCB / ECPD incl. desscruction limits of cables/wires

The graph shows that short-circuit currents > 7.5 kA occurring when using the MCB requires the use of a cable with a minimum cross section of 2.5 mm². Extrapolating the let-through energy curve shown, a 4 mm² cable would theoretically even be necessary from a short-circuit value of approx. 25 kA.

In comparison, the let-through energy of the ECPD is so low that the short-circuit protection of the 1.5 mm² cable is ensured at all times.

Fig. 3/7 shows a comparison of the current and energy limitation of the ECPD in comparison with conventional electro-mechanical protective switching devices.

3.4 Selectivity Behaviour

The ultra-fast switching of the ECPD and the associated high current and energy limitation are decisive for the fact that the ECPD generally behaves selectively to all upstream electro-mechanical protective switching devices in the short-circuit tripping range.

In the case of upstream fuses, their melting integral is the decisive factor for the selectivity to be expected.

The melting integral for a 6 A NH fuse with gG characteristic , for example, is 46 A²s and is therefore greater than the maximum let-through energy of the ECPD with 30 A²s.

With upstream miniature circuit-breakers (MCB) or molded-case circuit-breakers (MCCB), the level of the fault current is the decisive criterion for the expected selectivity behaviour.

Both the inertia of a magnetic release (TMTU) and the switch intrinsic time of an electronic release unit (ETU) are in any case greater than the duration of a fault switch-off of the ECPD, which is in the µs range. Selectivity is therefore also given for these device combinations.

The excitation/triggering currents of the ECPD are internally coordinated in such a way that they also behave selectively with each other due to the ultra-fast switching.

Electro-mechanical protective switching devices downstream of an ECPD cannot be selective due to the ultra-fast switching. From an operational point of view, such a constellation is therefore not practical. In such an application, troubleshooting would be time-consuming, as all affected outgoing circuits would have to be individually disconnected and reconnected until the ECPD trips again.

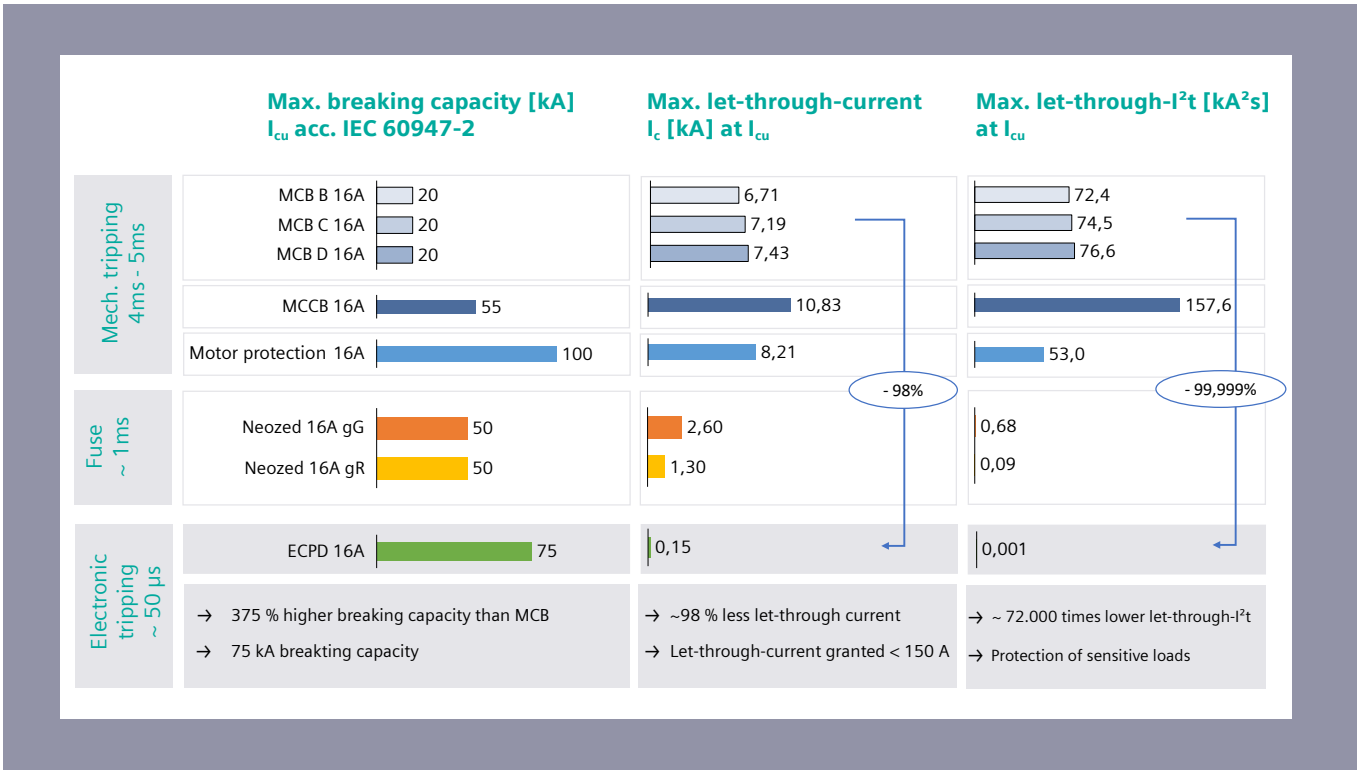

Fig. 3/7: Short-circuit breaking capacity and energy limitation values of low-voltage switching/protective devices in comparision with Siemens ECPD 5TY1

3.5 Backup Protection Capability

If a protective switching device has a switching capacity that is smaller than the prospective short-circuit protection at its installation location, it can be protected against overload by another, upstream protective switching device such as an overcurrent protection device (OCPD) or a pure short-circuit protection device or limiter (SCPD) in the event of a short circuit.

According to IEC 60364-5-53 (VDE 0100-530), this method is referred to as combined short-circuit protection.

In practice, the term backup protection is often used.

Backup protection in the normative sense is the protection of devices such as load-break switches, residual current circuit-breakers, overload protection relays, etc., which do not have their own short-circuit breaking capacity and must therefore be protected by a upstream protective switching device in the event of a short-circuit.

The protective switching device providing backup protection may also be installed downstream for these purposes, if the distance between these two devices has been installed protected against earth faults and short circuits, such as inside a switch cabinet. An example of this is the load-break switch as a group switch or as an infeed switching device in a switch cabinet.

Due to its strong breaking capacity of 75 kA, the ECPD itself does not require combined short-circuit protection, but can be used very well as a backup protection switching device due to its enormous current limiting capabilities. Any circuit-breaker, residual current circuit-breaker, etc. can be protected accordingly by the ECPD.

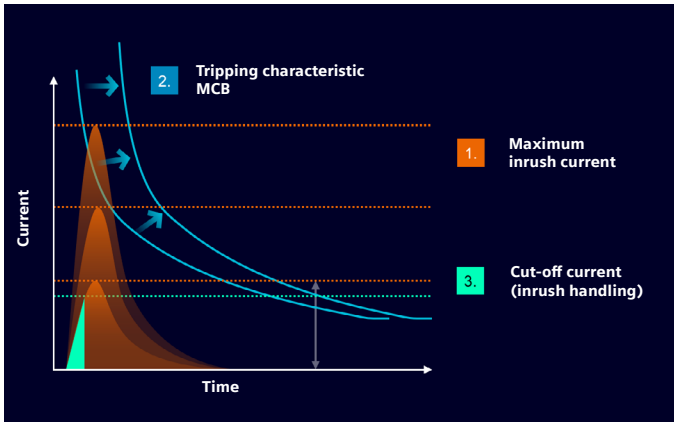

Fig. 3/8: Siemens ECPD 5TY1 – Inrush handling

3.6 Handling of Inrush and Starting Currents

As already mentioned, the instantaneous switch-off in the short-circuit range takes place in the event of overcurrents from the range 3 to 3.6 x I_n . This is initially in contradiction to the protection of consumer circuits with high inrush or starting currents. First of all, in this environment a distinction must be made between inrush current and starting current.

Inrush Current (also Pulse Current)

The inrush current is the current that is generated when capacitive loads, e.g. ballasts for lighting, or inductive loads, e.g. isolating transformers, are switched on. The course and level of this inrush current depends, among other things, on the pre-charge or residual charge state of capacitors or the pre-magnetization or residual magnetization of windings and the phase position of the voltage at the time of switching on.

As a general rule, the inrush current is lowest when the connection is made for:

- capacitive loads in voltage zero crossing or
- inductive loads at maximum voltage

If the switch-on time is unfavorable, the first current peak can assume values of 100 times of the rated load current and above and at the same time only lasts a few µs. The ability of a protective switching device to transfer this current without switching off is referred to as pulse strength.

The pulse current is followed by the inrush current, which continues until the capacitors are fully charged or the windings are magnetized until the open-circuit voltage is reached. The inrush current also decays very quickly and lasts from a few milliseconds to a few mains periods.

The ECPD handles inrush currents, also known as inrush handling or intelligent pulse strength, by changing to the STANDBY switching state when the switch-off threshold is exceeded by the first current pulse, but automatically switches back to the ON state immediately after the next zero voltage crossing.

Due to the targeted automatic reconnection at voltage zero crossing and the fact that the capacitive circuits have already been precharged in the previous voltage cycle, the next current pulse is greatly reduced.

This process may be repeated several times within the device until the switch-off current of the ECPD is no longer exceeded and the device remains in the ON state.

Any inductive loads are connected in the same way. In this case too, the effect of the pre-magnetization causes the switch-on pulses to quickly decay below the switch-off threshold of the ECPD.

Even in the event of saturation effects in transformers, the magnetic flux is quickly rebalanced by the immediate reconnection to the next voltage zero crossing, so that voltage and current can be transmitted without distortion.

In all cases mentioned, the user will not notice any negative effects.

Starting Current of Motor Loads

When motors are switched on, the rotating flywheel mass must be accelerated to nominal speed, whereby a breakdown torque must be overcome so that the motor starts up.

During this start-up phase, an increased current flows, which is referred to as start-up current and can always last for several mains periods up to several seconds.

At the moment of connection, the so-called starting peak current is generated. This can reach values up to 15 times the rated motor current. Starting currents can be "suppressed" by the ECPD using the algorithm described (intelligent pulse strength), but the starting current must not exceed the instantaneous tripping current of the ECPD and must also remain in the range below the overload characteristic (starting currents of motor loads are usually in the range of 5 to 8 times the rated motor current).

If this cannot be ensured, a (larger) spread between the rated motor current and the rated current of the ECPD must be planned when dimensioning the device. If motor loads with higher power ratings are supplied from single pole socket circuits, these are now generally equipped with appropriate starting current limiters to ensure that the motor can start even when conventional circuit-breakers are used.

3.7 Communication Function

The communication of the ECPD is based on the existing system of communicative DIN rail mounted devices and fuses (Fig. 3/9). This ensures compatibility with the entire SENTRON communication landscape.

If the ECPD is not yet able to cover certain applications in its first expansion stage, it is possible to combine the ECPD with other communication-capable devices in a distribution.

The ECPD communicates wirelessly within a control cabinet via ZigBee with the SENTRON Powercenter 1100, which can accommodate up to 24 devices and acts as a gateway.

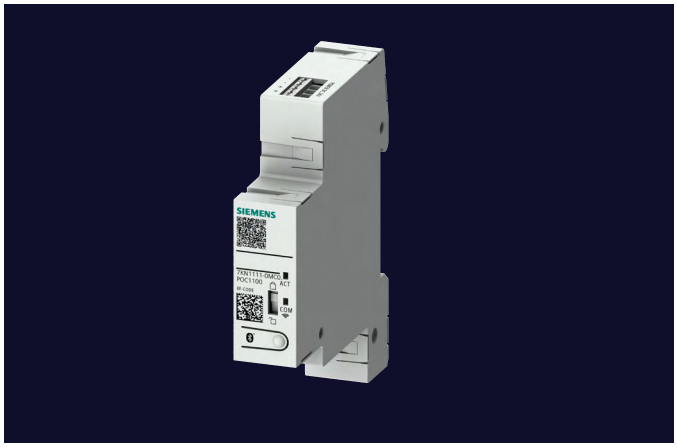

Fig. 3/10: SENTRON Powercenter 1100

There are several options for further communication via the Powercenter 1100:

- wired (LAN) via the SENTRON Power Center 3000 into a cloud
- wired (LAN) via a router, e.g. with a local building or energy management system or with SENTRON Powerconfig
- via Bluetooth to the SENTRON Powerconfig mobile app

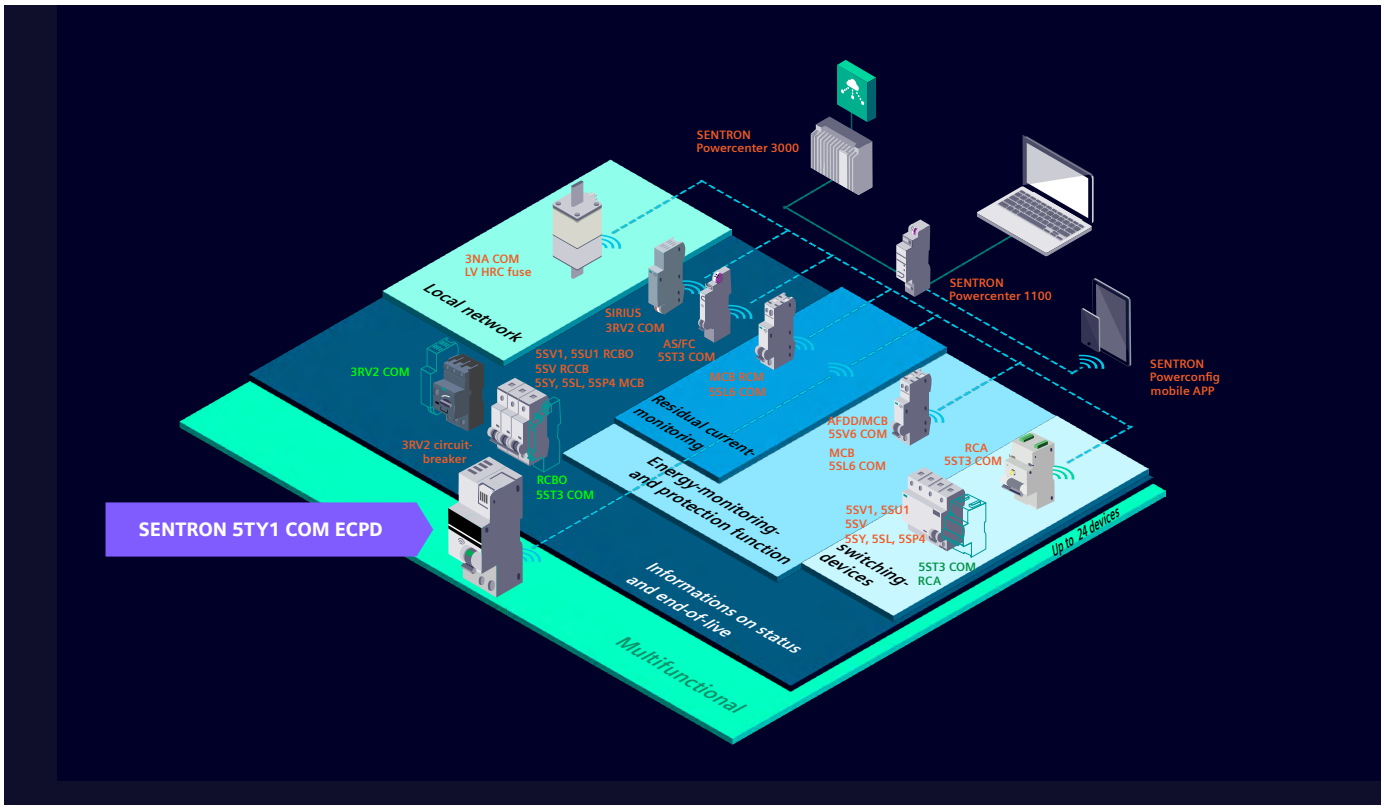

Fig. 3/9: Measuring- and communication plattform for SENTRON DIN rail mounted devices and fuses

3.8 Cybersecurity

In addition to the advantages mentioned above, data transparency from the power supply to the final circuit also harbors the risk of cyberattacks, especially if write access (parameter changes and control commands) is possible in addition to reading data. It is therefore particularly important to implement a comprehensive security concept and to keep it up to date at all times.

Safe products are an integral part of such a system. They are based on the two principles of security by design and security by default and have multidimensional security features.

Security by design

Security by design means ensuring that systems are as free of vulnerabilities and as insensitive to attacks as possible right from the start when developing hardware and software. Examples of this include the use of standardized communication protocols (e.g. MQTT, Bluetooth Low Energy, https) and the implementation of cybersecurity as an explicit release point in the product life cycle process.

Security by default

Security by default describes that the standard configuration of the components is selected in such a way that a high level of security is guaranteed. This is often at odds with user-friendliness. An example of this is the write protection set ex works or the deactivation of individual functions as part of the delivery status.

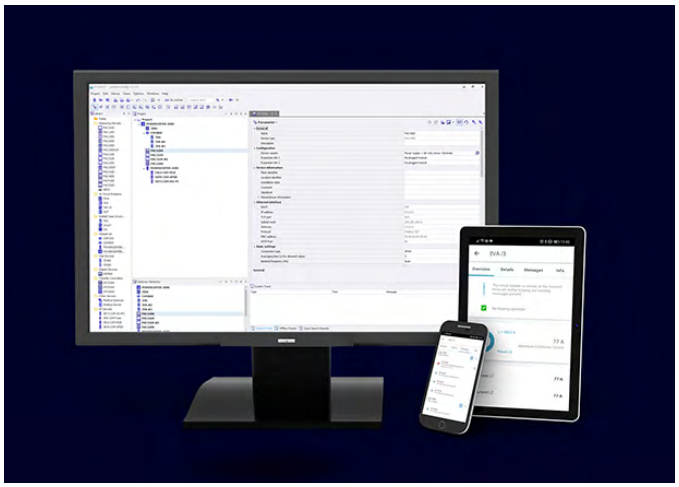

Fig. 3/10: Siemens ECPD 5TY1 – protected communication via SENTRON Powerconfig



Cybersecurity functions of the ECPD

Cybersecurity is also given top priority at ECPD. The ECPD has been developed according to the two mentioned criteria security by design and security by default and offers numerous security features:

» **Protected Remote Access**

Measured values and status data can only be read remotely; parameter changes can only be made in the unprotected area. Sensitive data such as protection parameters are subject to special configuration protection and are located inside the device in the so-called protected area. Changes can only be made here after prior activation (removal of write protection).

The activation of protected parameters is based on the principle of two-factor authentication.

The free SENTRON Powerconfig software (PC or mobile app version) is available for this purpose (Fig. 3/10).

The unlocking request from the software app must be acknowledged by pressing the test button on the ECPD onsite. The request to confirm the unlocking must be made within a time window of 90s. The successful unlocking itself is also time-limited.
The ECPD automatically switches back to protected mode after a preset time (10 minutes by default) at the latest. This mechanism ensures that important parameters are protected.

During a parameterization process, the connected circuit does not have to be disconnected from the power supply, i.e. the loads continue to be supplied without interruption.

» **Firmware Update, signed and encrypted**

The import of new firmware updates is only accepted if their origin is available in signed and encrypted form. A firmware downgrade is generally excluded in order to keep the security level at the latest state of the art. To prevent incompatibilities and security gaps, updates are always system-bound, i.e. actively coupled between the data transceiver and the protective switching device.

» **Encrypted control cabinet communication via ZigBee**

Furthermore, the ECPD communicates with the higher-level SENTRON Powercenter 1100 via a secure encrypted ZigBee connection based on a unique installation code and a unique MAC-address.

3.9 Sustainability

Up to 10 devices would be required to map the integrated functionalities of a single ECPD using conventional protection and switching devices.

The savings when using the ECPD are up to 80 % for electronics and up to 90 % for plastic, metal and packaging. In terms of space requirements 2 modular width units of the ECPD 16 modular width units when using conventional technology; at full load a power loss of 7 W compared to 18 W conventionally.

Siemens EcoTech

Reflected in current installation practice, this may initially only be a theoretical consideration, as such a full expansion of a branch is rather rare. However, this consideration demonstrates the potential of this new technology very well and at the same time offers which functional expansions in installation technology will be possible and can be used in the future without necessarily having to increase the footprint (i.e. the space requirement) in the control cabinet or distribution board.

A look at the neighboring communications world of today's smartphones or tablets illustrates how technology will also develop in energy distribution systems in the future due to the rapid progress of digitalization.

In the world of mobile communication, not everyone uses all the functions of their end device. Each user also uses different functions and combines or personalizes them to suit their individual use.

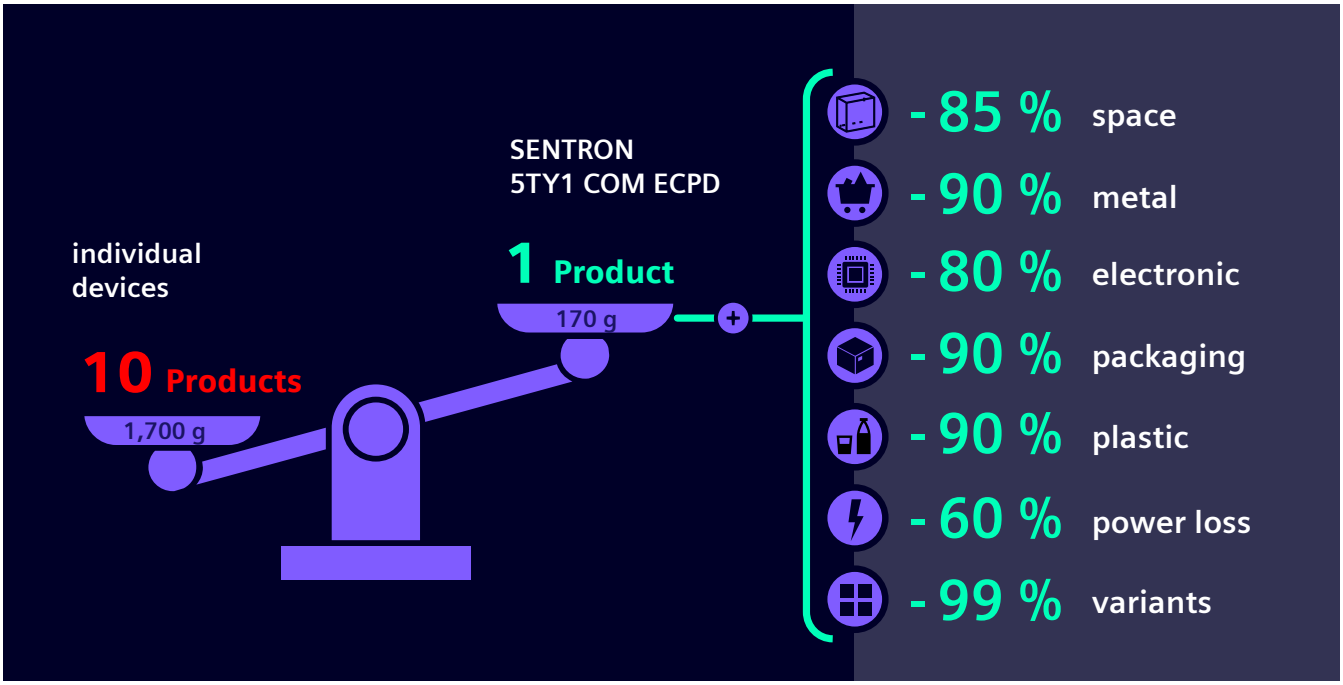

Fig. 3/11: Siemens ECPD 5TY1 – Saving potential for sustainable planning

The basic principle of using the ECPD is identical. The ECPD can be adapted and parameterized for the desired application and its functionalities can be activated as required. In conjunction with the ongoing development of power electronics over the next few years, even further savings can be expected, e.g. in terms of electrical losses or space requirements, material usage and packaging.

Ultimately, these are the reasons that led to the ECPD being awarded the EcoTech label by Siemens. The Siemens EcoTech label is an environmental declaration for products based on product-specific assessments of sustainability-relevant KPIs. This label is issued for products that promote and support the sustainable transformation of industry and infrastructure in an excellent way.

3.10 Normative Situation – Applicability of the ECPD in Electrical Planning

With the ECPD, a market-ready, innovative product has been introduced for which the standards landscape still needs to catch up.

However, this does not mean that the ECPD may not yet be used. Norms and standards merely represent the recognized state of the art, the ECPD reflects the state of the art. Siemens guarantees safe operation in installations of low-voltage systems within the framework of currently valid standards. This is also confirmed in an official letter attached to this technical document.

For this purpose, the ECPD was developed on the basis of the product standard for the RCD/LCD (RCBO), IEC 61009-1 (VDE 0664-20), as far as applicable, tested.

The following aspects are examples of this:

- Test series E_0 for the overcurrent characteristic
- Test series D_0 for the tripping characteristic under fault conditions → ΔI_n
- Test series B for suitability for disconnecting and switching

These test series are used to verify the requirements for overcurrent protection in accordance with IEC 60364-4-43 (VDE 0100-439), to the protection against electric shock according to IEC 60364-4-41 (VDE 0100-410), as well as to the suitability of the protective measure disconnection and switching according to IEC 60364-5-53 section 462 (DIN VDE 0100-460).

In Europe, RCCBs and RCBOs are required to be independent of the system voltage:

- for socket outlets in final circuits up to 32 A
- for final circuits with permanently connected portable equipment up to 32 A
- for lighting circuits in apartments
- as additional protection in the event of failure of precautions for basic protection and/or fault protection or in the event of carelessness on the part of the user.

The reason for this requirement is that in the case of system-voltage-dependent devices, for example, in the event of

- system voltage is too low
- Neutral conductor interruption
- defective hardware in the device

the residual current protection function (ΔI_n) no longer acts (correctly), the voltage in the circuit is still present and therefore protection against electric shock is no longer adequate.

Even if the ECPD is not independent of the system voltage in the sense of the previous standards, it still has methods that are at least equivalent to a device that is independent of the system voltage. System voltage independence is necessary nowadays because a protective device in the switched-on state (ON state) connects the load electrical with the power supply. It must therefore be ensured that the protective functions, in particular against electric shock, acts safely and independently of the system voltage.

The ECPD can only be set to the ON-state, if the system voltage is present and valid. This means that this switching process cannot be carried out without the corresponding system voltage, as the power semiconductors used (in the electronic switch) are self-locking and must be actively switched on by the electronics.

This is only possible, if the electronics are fully functional and the required protective functions can be carried out.

This new feature makes the system voltage dependence of the protective function irrelevant in relation to the currently defined system voltage independence.

Furthermore, the ECPD routinely performs repetitive checks on the electronics and protection algorithms to ensure that it is always functional. It also detects neutral interruptions. As soon as a fault is diagnosed, it switches off (e.g. to the safely disconnected OFF state) so that no more current can flow on the load side, thus ensuring personal safety.

4 Application Samples for the ECPD

The following application examples outline the strengths and advantages of ECPD compared to conventional protection technology.

4.1 Application Sample 1 – Protection in the Event of Neutral Conductor Break

In today's installations, this fault is rarely taken into account. However, if this occurs, it can lead to dangerous voltage shifts, damage electrical loads and cause potentially life-threatening situations (fire). The following figure (Fig. 4/1) visualizes the situation with conventional technology in the left-hand diagram. The connection of the single-phase loads was distributed to the phases carrying the operating current in a practical manner.

In the event of a neutral conductor break in the supply line, the return path for the current flow of the single-phase loads is interrupted and an alternative current flow is formed between the two phases to which the loads are connected.

Depending on the resistance of the loads, a dangerous overvoltage can occur on some of them and lead to (thermal) overload and damage.

An installed ECPD detects neutral conductor interruptions and switches off automatically, i.e. the power electronics switch to the high-impedance state (STANDBY).

There is no longer any voltage on the consumers and they cannot be damaged.

4.2 Application Sample 2 – Selectivity in Distribution Boards with high Prospective Currents

In distribution boards with DIN rail mounted devices, a compromise often had to be made in terms of selectivity if the calculated (maximum) prospective short-circuit current exceeded the switching capacity of the installed electro-mechanical protective switching devices. The upstream protective device could only guarantee the combined short-circuit protection (backup protection) by tripping itself. Full selectivity over the entire current/time range could therefore not be guaranteed for these device combinations.

Selectivity plays a significant role particularly in safety power supplies, in industrial processes or data centers, where interruptions to the supply of larger consumer groups can cause considerable consequential costs and endanger people or equipment. Due to the high power density of such applications, the short-circuit currents to be expected in the distribution boards are often at a much higher level than in small businesses or similar areas.

The following diagram (Fig. 4/2) illustrates examples of current solutions using conventional technology and provides a qualitative assessment with regard to backup protection, selectivity and space requirements in comparison with an ECPD.

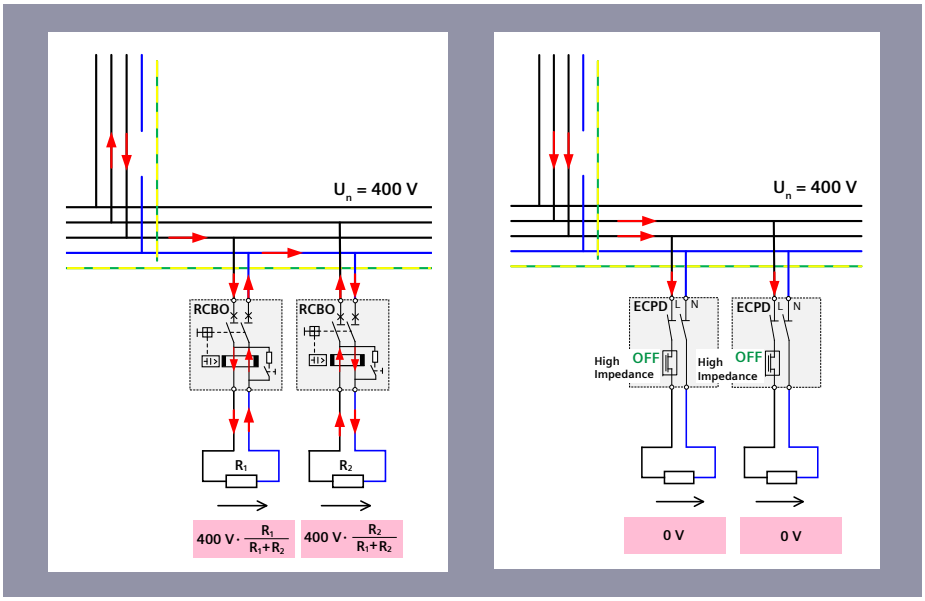

Fig. 4/1: Application sample Siemens ECPD 5TY1 – Protection in the case of neutral conductor breakage

The maximum prospective short-circuit current is assumed to be 25 kA.

In the first two feeders (left-hand diagram), the RCDs B/16 A used on the consumer circuits can be backup protected by a 3VA1 ≤ 160 A molded-case circuit-breaker (MCCB) or a gG fuse ≤ 100 A with high short-circuit currents.

Molded-case circuit-breakers or fuses act as group switches in these feeders. In combination with the MCCB, the selectivity is in the single-digit kA range; with the gG fuse even in the very low single-digit kA range.

In the example feeders 3 and 4, classic miniature circuit breakers (MCB, B/16A) are used instead of the RCBO protective devices. To ensure personal safety (e.g. for socket circuits), a group-RCCB (5SV) is used upstream.

In this constellation, neither the upstream molded-case circuit-breaker nor the downstream miniature circuit breakers can provide backup protection for the residual current circuit-breaker, i.e. this combination cannot be implemented. This requires a back-up fuse as backup protection, which must be limited to a maximum of 80 A.

This reduces the achievable selectivity limit even further.

Feeder 5 and 6 show a solution that is still little known or rarely used in practice, as they are significantly more cost-intensive than the feeders presented so far.

Here, a load-break switch in the design of a molded-case circuit-breaker together with an attached RCD module acts as a group switch (3VA1 LT, RCD ≤ 160 A). The RCD module ensures protection against electric shock; the device combination ensures the backup protection for the downstream miniature circuit breakers (MCB, B/16A).

Alternatively, a selective molded-case circuit-breaker (3VA21 ≤ 160 A) with RCD module could also be used as a group switch.
In both cases, selectivity can be guaranteed up to the breaking capacity (I_{cu}) of the miniature circuit-breakers.

The use of ECPD devices is unbeatable here (Fig. 4/2, the two feeders on the right). At 75 kA, their breaking capacity is completely sufficient so that no combined short-circuit protection is required. At the same time, these protective switching devices are fully selective to all upstream protective switching devices.

If a group switch is required for operational reasons, RCDs (5SV) or load-break switches can be used without any problems and would in turn receive backup protection from the ECPDs used, which is, however, not electro-technically necessary in the shown feeders.

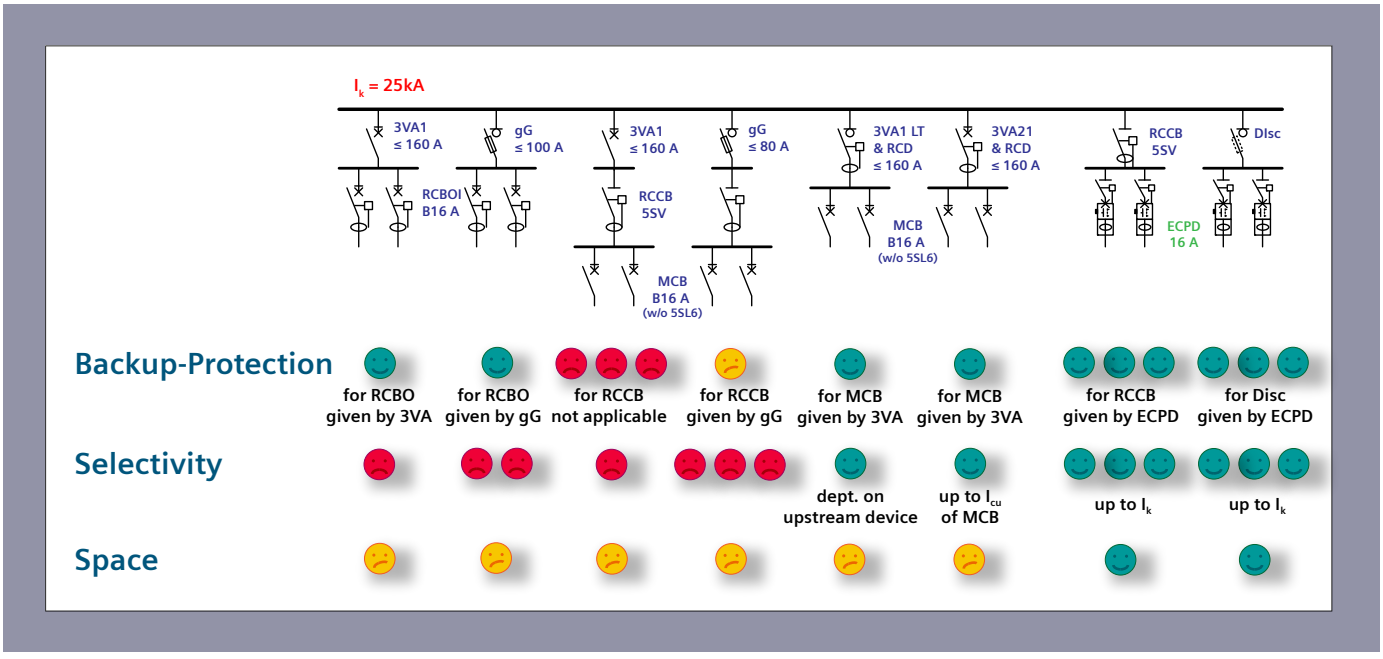

Fig. 4/2: Siemens ECPD 5TY1 – Evaluation of backup protection, selectivity and space requirements in comparison with conventional switching technology

4.3 Application Sample 3 – Monitoring Leakage/Load Currents for critical Loads

The continuous measurement of electrical characteristics, such as leakage currents (RCM) or load currents, can be used to detect abnormal behavior of the load or load circuit at an early stage and initiate measures before the critical load is damaged or fails.

Critical consumers could be, for example, refrigeration equipment for blood reserves, antidotes or other goods in clinics or facilities in the pharmaceutical, chemical or food and beverage industries.

Leakage currents can be caused by faulty supply cables or insulation damage on the load, just as the occurrence of abnormal load currents indicates a possible fault on the load.

In such cases, the integrated signaling functionality in the ECPD can be used to send a (warning) message to a higher-level system as a preventive measure or to reconnect the system remotely after automatic shutdown and fault clearing.

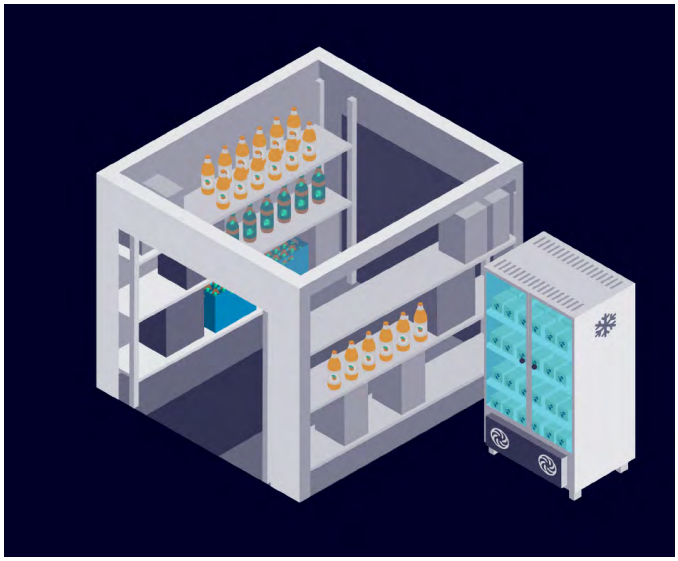

Fig. 4/3: Siemens ECPD 5TY1 – Monitoring critical loads

4.4 Application Sample 4 – Lighting Circuits for Workstations, Parking garages, large Halls or Tunnels

The lighting used today in infrastructure and industrial environments is usually fitted with electronic ballasts (EBs). These are characterized by a high inrush current, which severely limits the number of luminaires that can be connected to a common circuit. This inrush current can be up to 100 times greater than the rated current of the respective light source and only lasts for a few µs (Fig. 4/4b).

The manufacturers of protective switching devices therefore generally specify the number of light sources that may be operated simultaneously on one device, depending on its rated current and tripping characteristic. This means that the total load current of the lamps is only a fraction of the rated current of the protective switching device. This value is generally between 20 % and 30 %.

The ECPD with its inrush handling masters the handling of inrush currents and allows a higher number of luminaires to be integrated per circuit. At the same time, correct operation of the lamps is guaranteed during the switch-on process.

The number of circuits required can easily be reduced by a factor of 3 to 4 compared to the use of conventional protective switching technology. This saves entire lighting strings.

This is associated with a shorter overall length for cables to be laid, which also leads to a reduced fire load, smaller distribution boards and savings in installation costs for cable routes and working hours for laying.

This makes the entire application more economical and safer overall.



Fig. 4/4a: Siemens ECPD 5TY1 – efficient universal protection for lightning circuits

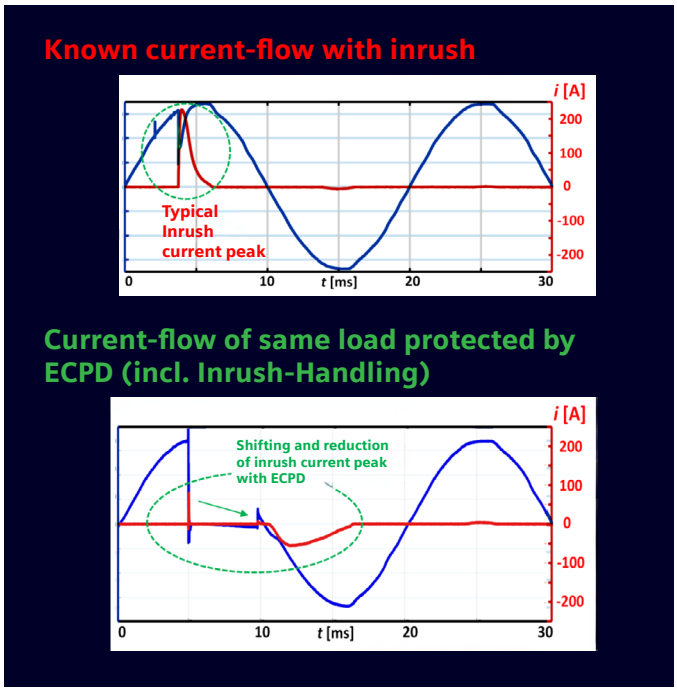

Fig. 4/4b: Siemens ECPD 5TY1 – Inrush handling for lightning circuits

4.5 Application Sample 5 – UPS-buffered Loads

In industrial plants or in the infrastructure sector, sensitive or system-critical consumers are often buffered by smaller UPS systems resp. their uninterruptible power supply is ensured via these.

For example, these consumers are power supply units that are essential for the control or regulation of machines or processes, as their failure could bring production or manufacturing processes to a standstill.

Fig. 4/5 shows an example of the supply of a load group using a static UPS system. Static UPS systems usually have an (internal) electronic bypass, which is automatically been activated in the event of faults in the DC link or in the event of short circuits, for example.

The external bypass is been activated during maintenance work on the UPS system, for example, in order to ensure the continued supply of the connected loads.

Critical for these types of supply is the time it takes for short circuits to occur in the UPS-buffered network until the fault has been switched off. When using electro-mechanical protective switching devices, temporary voltage dips occur during this period, which can be several hundred milliseconds and can lead to machine controls in neighboring feeders being impaired or failing.

A planning handicap that is difficult to get under control with conventional protection technology.

The following is a typical scenario with concrete data to illustrate this:

- In the UPS network, no miniature circuit breakers can be planned for the connected load feeders, as a short-circuit current of 25 kA in bypass operation in the area upstream of the UPS system would exceed its switching capacity. An upstream group-fuse for setting up combined short-circuit protection (backup protection) would in turn negatively affect the selectivity of the feeders (Chap. 4.2).

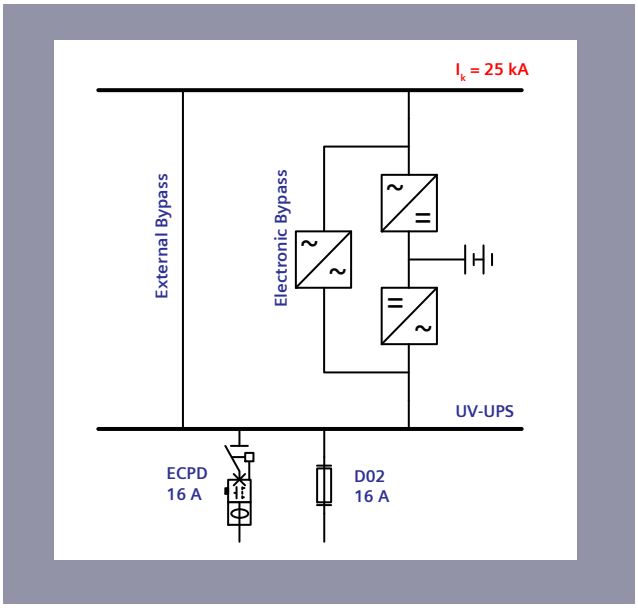

Fig. 4/5: Siemens ECPD 5TY1 – Application sample for UPS-buffered, system-critical consumers

- Alternative fuses in the load feeders would have a sufficient breaking capacity, but have the disadvantage that they are slow acting to small short-circuit currents compared to circuit breakers, i.e. they have long switch-off times. A static UPS system generally supplies a short-circuit current of 2.5 to 3 times the rated current for a short time of approx. 10 ms in the event of a single-pole fault.
  This (continuous short circuit) current then drops to 2 times the value.

  For a UPS system with 30 kVA, this means:

  I_n = 43 A ➞ I_{k1} (10 ms) = 129 A and I_{k1} (> 10 ms) = 86 A

  A D02 fuse (neozed) would trip at these short-circuit currents in the range between 100 ms and 500 ms. The voltage dip until disconnection affects the control system in the parallel, non-faulty outgoing circuits and leads to its failure.

- The ECPD has a sufficient breaking capacity of 75 kA. The ultra-fast disconnection occurs from 3.6 times the rated current, i.e. with a rated current of I_n 16 A, from a short-circuit current of 57.6 A. The voltage dip up to the fault switch-off is imperceptible or so short that the controls in the parallel, non-faulty outgoing circuits are not affected.

4.6 Application Sample 6 – Use in Control Cabinets

Thanks to its third switching state STANDBY (STBY), the ECPD offers the option of switching on and off remotely, either via the digital inputs/outputs with control circuits or directly via the SENTRON Powercenter 1100.

If conventional technology is used, external motor drives or contactors are required for this task. Furthermore, these applications usually require the use of an additional signal relay to report protective trips to the control room. With ECPD, this is an integrated functionality.

In applications such as the process industry or in district heating networks, electrical valves or similar consumers need to be switched remotely. This integrated functionality, compactly installed in a single protective device, can be a great advantage in this environment in particular.

The more switchable loads that have to be supplied from a control cabinet, the greater the space advantage of using an ECPD and the lower the complexity of the entire set-up.

The risk or probability of faulty wiring or even faults within the wiring is also reduced, as is the maintenance effort compared to the use of conventional technology.

During operation, the ECPD's continuous self-tests provide additional safety and increase the availability of the control cabinet system.

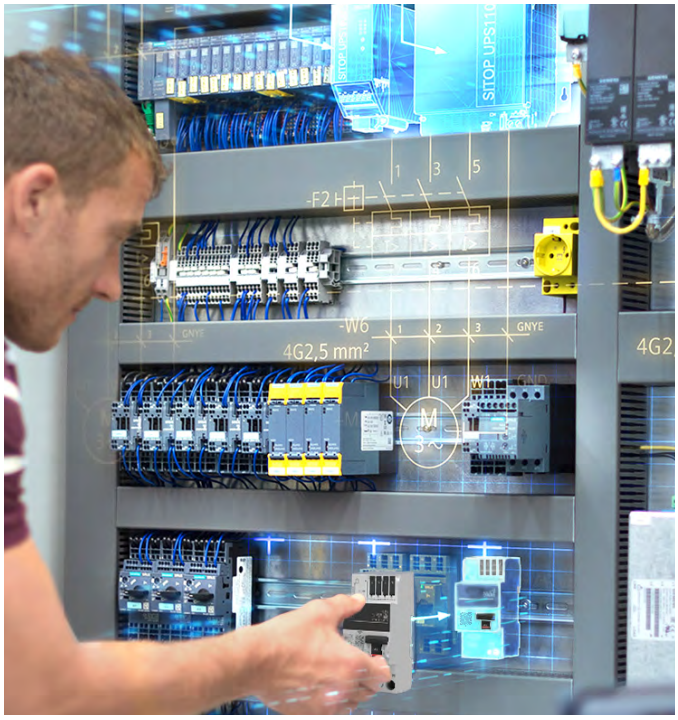

Fig. 4/6: Siemens ECPD 5TY1 – Use in control cabinets

4.7 Application sample 7 – „Service Sockets“ in public Areas

The term "Service Sockets" in public areas should generally be understood to mean sockets or USB sockets that are used to charge or operate smartphones, laptops, notepads or similar devices in trains, airports, business lounges, etc.

In an increasingly mobile, digitalized world, it is becoming more and more important for companies in these sectors to offer their customers this service amenity.

In view of the large number of people and the frequency with which these sockets are used, there is an increased risk that faulty appliances will be plugged in or that these sockets will be used improperly or with little care, which increases the susceptibility to faults.

Any electrical faults that occur usually result in a protective trip of the affected circuit. If these switched-off circuits remain undetected for a long time, this can very quickly lead to customer dissatisfaction.

The automatic sending of (notification/warning) messages about circuit shutdowns enables service personnel to intervene promptly and in a targeted manner on site or remotely and minimizes the unavailability of the service offered - an ideal case for the use of an ECPD with its integrated functionality.

In addition to the reporting functionality, the function of (repeated) automatic activation (ARD functionality) of the ECPD after a freely selectable time could also be used.

Thanks to the ultra-fast switching and the pronounced current limitation of the ECPD, there is no danger even if the faulty appliance is still connected to the socket.



Fig. 4/7: Siemens ECPD 5TY1 – Protection of persons and lines for service sockets in public areas

5 The Consequences

This technical paper demonstrates the valuable potential of the new technology of electronic switching for future electrical power supply.

This simplifies and speeds up the work of planners, panel builders and installers. They no longer need extensive calculations and verifications to determine and explicitly document the protection of systems and people:

- Personal safety is guaranteed at all times with the ECPD's integrated fault current protection.
- Short-circuit protection for cables and lines as well as backup protection for other (protective) switching devices is always provided due to the pronounced current and energy limitation.
- The breaking capacity of the ECPD with 75 kA is usually sufficient at the installation point, so that no combined short-circuit protection is required for this device.
- Selectivity for high system availability is largely guaranteed from the outset when using an ECPD.

Conversely for electrical planning this means:

- Circuits with electronic protective switching devices such as the ECPD only need to be coordinated according to the aspects of overload protection and voltage drop.
- Adjustments or changes in the upstream network will generally have no effect on electricity circuits with ECPD.

For customers and operators of electrical systems, the ECPD thus represents a valuable investment in the future, in which the digitalization of the power supply network can be successfully implemented with a view to increased energy efficiency and transparency, and finally connection to a building and energy management system right through to the final circuit.

6 The Outlook

The ECPD is currently available in rated currents of up to 16 A for single-pole circuits. The possible applications are therefore limited.

Nevertheless, this new technology for semiconductor protection devices points the way to the future in low-voltage networks and is already integrated into the SIMARIS tool landscape (version V24.1 and higher).

It is only a matter of time before devices with a higher number of poles and higher rated currents will be available for three-phase networks.

The update capability of electronic protective switching devices or electronic tripping units already offers the option of expandability during operation, whether for additional comfort functions such as a timer or additional protective functions such as fire protection via AFDD or personal safety via residual current protection in type B or in other designs, which are required in off-grid networks with integrated regenerative energy generators.

All players in the field of low-voltage power supply, from planning to operation, can already familiarize themselves with the new technology of power electronics and gain initial experience. We welcome feedback and suggestions for further development at any time.

7 Totally Integrated Power – Individual Expert advice and Project support

The application examples shown illustrate the many possible uses of the ECPD from Siemens and demonstrate the planning and overall economic advantages for future power supply solutions.

Are you highly interested but still unsure whether you want to go down this new path (alone)?

We would be happy to convince you in a personal meeting and advise you individually on your project.

The TIP Consultant Support will be happy to provide you with its specialist expertise and show you ways and means of sustainably designing and optimizing the efficiency of your power supply systems by using an ECPD from Siemens.

The team from Totally Integrated Power supports you in the design of integrated power supply solutions for applications in infrastructure, buildings and industry in a variety of ways.

- Individual project consulting and support
- SIMARIS Suite & SIMARIS planning tools
- Revit-files for Building Information Modeling (BIM)
- Tender texts
- Planning and application manuals
- Technical document for specific planning topics
- Training offers

Holistic planning combined with innovative technology from Siemens increased sustainability, efficiency and reliability of your power distribution systems.

siemens.com/tip





Siemens AG

Smart Infrastructure
Electrification & Automation
Mozartstr. 31c
91052 Erlangen

For further informations, please see
siemens.com/tip

E-Mail: consultant-support.tip@siemens.com

Subject to changes and errors

12.2024 / V9

The information given in this document only contains general descriptions and/or performance features which may not always specifically reflect those described, or which may undergo modification in the course of further development of the products. The requested performance features are binding only when they are expressly agreed upon in the concluded contract. All product designations may be trademarks or other rights of Siemens AG, its affiliated companies or other companies whose use by third parties for their own purposes could violate the rights of the respective owner.

© 2024 by Siemens AG, Berlin and Munich